fireframes®
HURRICANE DOOR SYSTEM

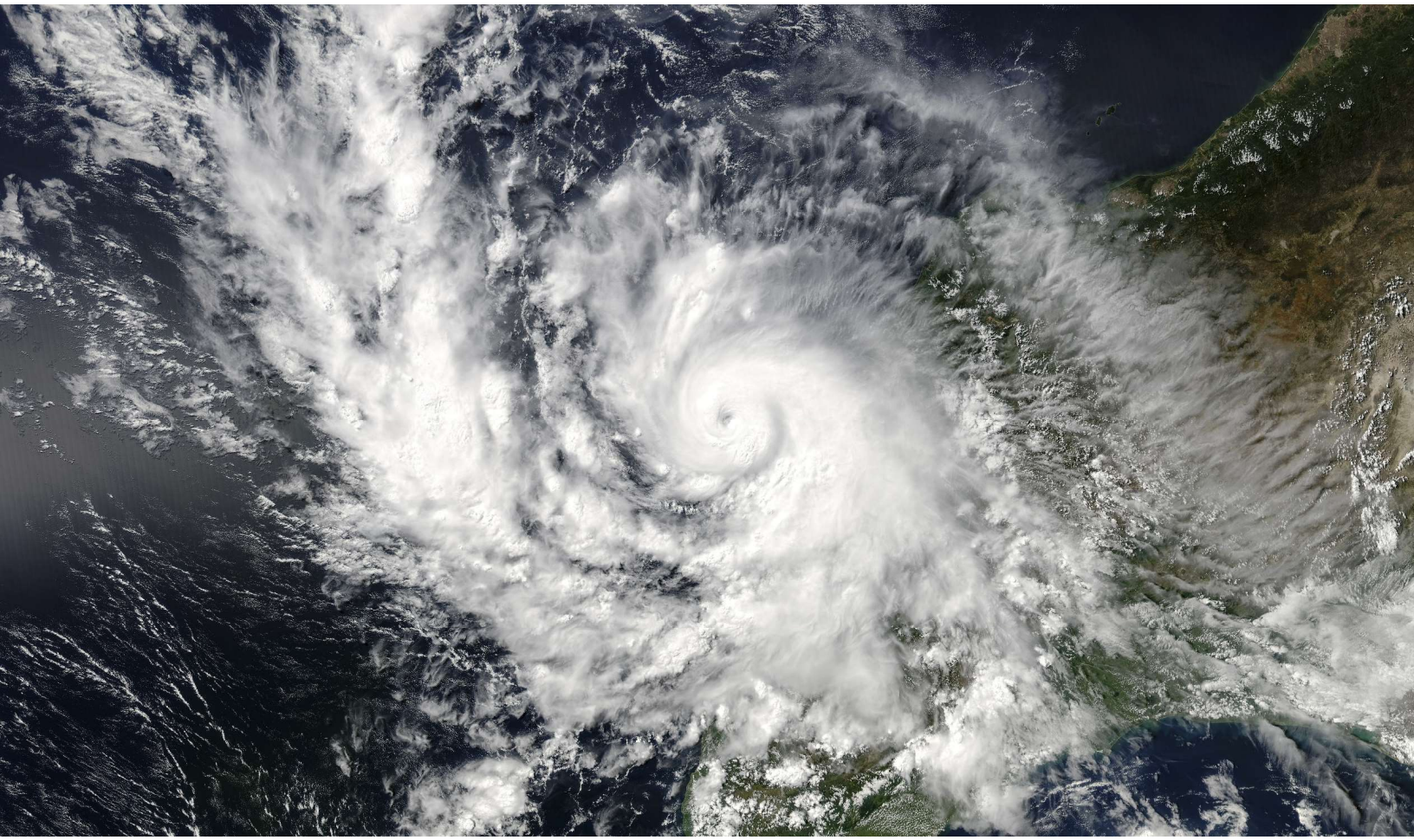

Technical Glass Products
Architectural Specification Manual

TGP TECHNICAL GLASS PRODUCTS®
ALLEGION™

8107 Bracken Place SE • Snoqualmie, WA 98065
p 800.426.0279 e tgp.sales@allegion.com w fireglass.com

FIREFRAMES® HURRICANE DOOR SYSTEM

The Fireframes® Hurricane Door System, incorporating precise roll-forming technology, provides a sleek, modern alternative to traditional hollow metal frames. Using narrow profiles, the Fireframes Hurricane Door System exceeds traditional fire-rated frame systems in aesthetics and performance. Available with fire ratings from 20 to 90 minutes, this modular system can incorporate fire rated doors with additional windstorm protection as a standalone solution or part of a surrounding compatible Fireframes Hurricane Curtainwall System, surpassing traditional systems.

For specifications, photographs and additional information contact:

Technical Glass Products
8107 Bracken Place SE
Snoqualmie, WA 98065

Office: 800.426.0279
425.396.8200
E-mail: TGP.sales@allegion.com
Web: fireglass.com

© June 2026 Technical Glass Products. Technical Glass Products, Fireframes, Fireglass and One Source. Many Solutions. are registered trademarks of Technical Glass Products. This information is intended for general reference only.

Table of Contents

System Exploded View....4
Material Key Chart....5
General Information....6
- Features....6
- Listings....6
- Sizing Guidelines....7
- Americans with Disability Act Standards on Fire Protection Doors....8
- Conventional Wood or Hollow Metal Doors in Fireframes Hurricane Door System Frames....8
- Fire-Rated Glazing Options....8
- Glazing Specifications....9
- How to Determine Door Handing....10
- Door Hardware Configurations and Hardware Options....11

Recommended Guidelines....12
Sample Elevations – Door Pairs....14
Sample Section Details – Doors....15

System Exploded View

ITEM	DESCRIPTION	ITEM	DESCRIPTION	ITEM	DESCRIPTION
1	DOOR FRAME PROFILE	7	DOOR GASKET, MEETING STILE	13	BEAD LOCK SCREWS, 8-32 x 1"
2	DOOR PROFILE, PIVOT STILE	8	DOOR GASKET, PERIMETER	14	EXIT DEVICE
3	DOOR PROFILE, MEETING STILE	9	SETTING BLOCKS	15	EXIT DEVICE,TOP LATCH AND HOUSING
4	DOOR PROFILE, VARIABLE MIDRAIL	10	GLAZING MATERIAL, FIRE-RATED	16	EXIT DEVICE, BOTTOM LATCH
5	DOOR PROFILE, BOTTOM RAIL	11	GLAZING BEAD	17	EXIT DEVICE, VERTICAL RODS
6	DOOR PIVOT ASSEMBLY	12	GLAZING BEAD STUDS	18	LEVER TRIM
				19	MOUNTING PLATES & SEX BOLTS

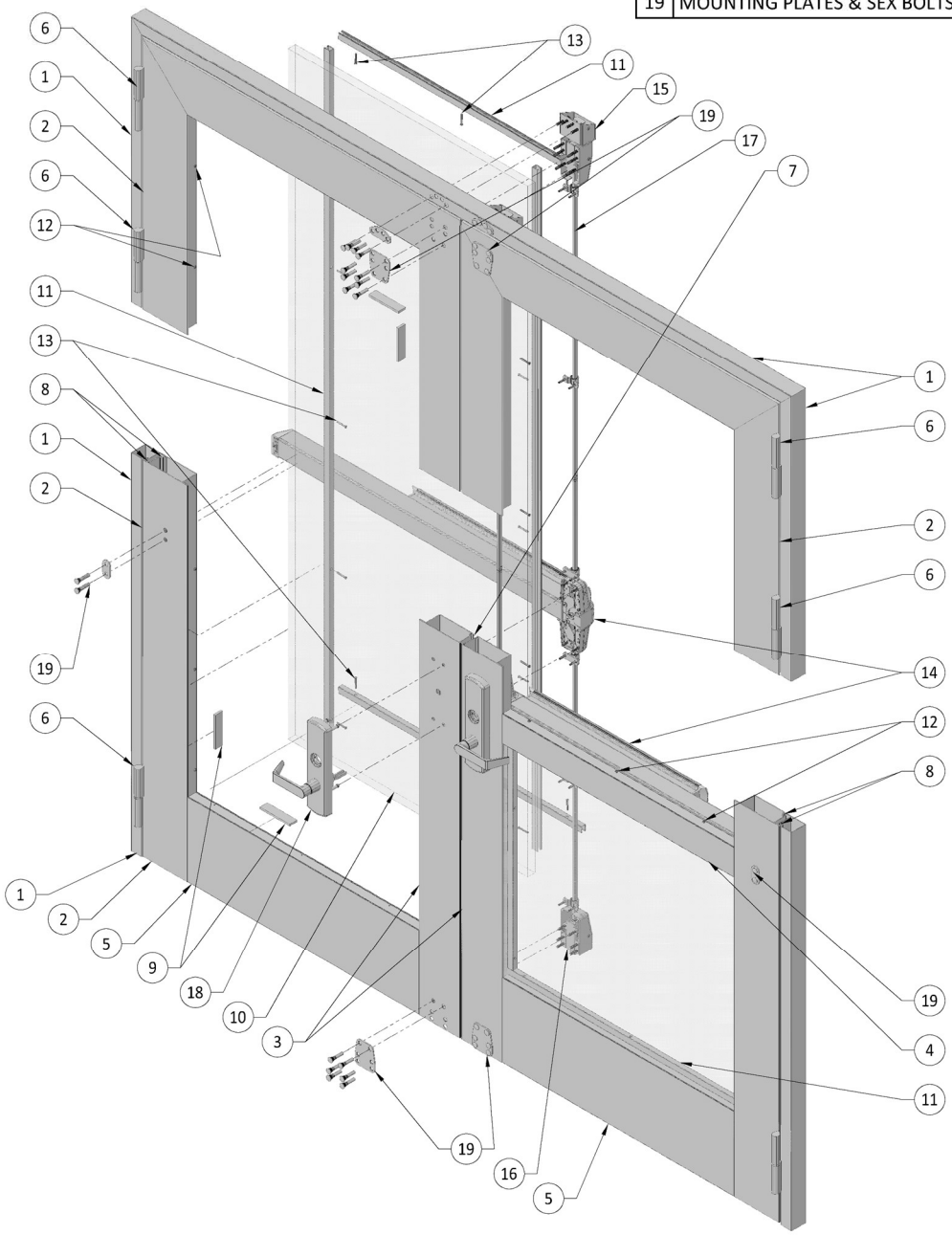

Figure 1 - System Exploded View

Material Key Chart

Material	Required Material **NOT PROVIDED** With Fireframes Hurricane Door System
FINISH SEALANT	Sealant installed into the interior and exterior perimeter cavity. Select color for sealant to match frame or as directed by project architect.
CAP SEAL	**REQUIRED** on all exterior applications, use a continuous silicone sealant. Select color to match frame.
ANCHOR FASTENER	As wall constructions vary widely in design, TGP does not provide perimeter fasteners (anchors). All frames are factory drilled to receive #12 flat head perimeter screws at approximately 24" on center. **Fasteners must be corrosion resistant per** FBC Section 1711. See FBC Section 1711 for specific requirements based on building location.
FIRESAFING	Intumescent sealant or firmly packed mineral wool must be installed in a continuous fashion between frame assembly and wall construction, being interrupted only by the perimeter anchor shims. Sealant manufacturers such as Tremco, Pemko and many others supply intumescent sealants.
HEEL BEAD	**REQUIRED** in exterior applications: apply a continuous bead of silicone sealant at all horizontal to vertical intersections in the glazing pocket, and a heel bead along the sill and 4" vertically up each jamb. Sealant must be installed between the glass edge and frame profile.
GLAZING COMPOUND	DOWSIL™ 995 structural sealant is required at the perimeter flange to glass joint, and at the interior bead to glass joint. **REQUIRED** on 90-minute applications exceeding 1,393 sq. inches. Kerafix® 2000 glazing tape (white – calcium magnesium silicate) supplied by TGP must be used below the DOW 995 sealant noted above. Refer to Glazing Specifications for glazing tape sizes, and Glazing Installation Instructions.
SHIMS	Perimeter shims at anchor locations are to be of hardwood (oak) or non-combustible (steel) materials. **Plastic shims may not be used.** TGP recommends a 3/8" (9.5 mm) caulk joint between frame and all wall conditions.
WALL CONDITION	Rated wall construction by other trades.
Material	**Fasteners Provided With Fireframes Hurricane Door System**
BEAD LOCK SCREW	8-32 X 1" Flat Head Screws. The glazing beads and frames are factory fabricated to receive lock screws. The screws are supplied with screw heads painted to match frames. Bead lock screws are not used on non-rated applications.
BEAD STUD	Glazing beads snap onto factory installed, steel bead studs at approximately 12" on center.
Material	**Components Provided With Fireframes Hurricane Door System**
SETTING BLOCKS	6 mm calcium silicate, or hardwood, setting blocks shipped loose for field installation. Refer to Glazing Installation Instructions.
FIRE-RATED GLAZING MATERIAL	FireLite Plus® Hurricane glazing in either monolithic or IGU form to be used. Refer to the Fire-Rated Glazing Options and Specifications, and Glazing Installation Instructions.
FIRE-RATED GLAZING TAPE	**Fire-rated glazing tape for 90-minute Fireframes Hurricane Door System assemblies only**. Refer to Glazing Specifications section for glazing tape sizes, and Glazing Installation Instructions.
GLAZING BEAD	Snap-on glazing bead to hold glass in system.
WEATHER SEAL	Silicone gasket used at door meeting stiles.
DOOR GASKET	Silicone door stop gasket used on door leaf and door frame.

Figure 2 - Material Key Chart

General Information

This document is meant as a general description of typical installations. As such, it is the responsibility of the installer to ensure frame materials are installed per the conditions that exist on any given project in accordance with these instructions and project drawings. TGP project drawings may detail modifications to the surrounding conditions required for a given project, (if architectural details or sketches were provided to TGP) and should be used in conjunction with these instructions. In the event of any conflict between these instructions and TGP project drawings, the TGP project drawings shall govern. TGP does not accept any warranty and / or liability for installations not in compliance with this document or other non-conforming use of the TGP products and / or system. Contact TGP with questions concerning these details as they apply to the particulars of a given project.

FEATURES

- Fabricated in the U.S.A.
- Easy installation similar to typical storefront systems
- Surface powder coated at the factory to match the desired color scheme
- Passes positive pressure test standards **UL 10C**.
- Passes air leakage requirements of **UL 1784** for smoke "S" rating.

Note: This product is not intended for use in locations requiring a barrier to radiant heat. This product does not meet test standards **ASTM E-119** or **UL 263**. If your jurisdiction requires “barrier to heat” framing, please contact Technical Glass Products regarding **Fireframes® Heat Barrier Series**.

LISTINGS

- Classified and labeled by Underwriters Laboratories, Inc.® (UL) and Underwriters Laboratories of Canada (ULC).
- Test report number for labeled 20/45/60/90 minute fire-rated frame assemblies is **UL File No. R-19207.**
- Test report number for labeled 80 PSF Design Pressure Windstorm Rated Assemblies is **UL File No. ZHLA.94.**
- Doors tested in accordance with **UL 10B**, **UL 10C, CAN 4 S-104,** and **NFPA 252.**
- Doors tested for Impact Test, Uniform Static Air Pressure and Cyclic Wind Pressure Loading to **TAS-201, TAS-202** and **TAS-203**, and extended elements of **ASTM E330**, **ASTM E1886**, and **ASTM E1996**.

General Information

SIZING GUIDELINES

GLASS SIZES

Product	Application	Rating Minutes	Max. Exposed Area		Max. Exposed Width		Max. Exposed Height	
			Square Inches	Square Meters	Inches	Millimeter	Inches	Millimeter
FireLite Plus Hurricane FireLite Plus Hurricane IGU	Active/Active Door Pair	20	3,204	2.07	36	914	89	2,261
		45	3,204	2.07	36	914	89	2,261
		60	3,204	2.07	36	914	89	2,261
		90	2,034	1.31	36	914	56-1/2	1,435

Note: 1. Individual lite sizes cannot exceed "Maximum Exposed Area" shown above.
2. DLO: the Day Light Opening, is the Exposed dimension.

DOOR SIZES

DOORS: Active/Active	Rating (Minutes)	Max. Width (Inches)	Max. Width (Millimeters)	Max. Height (Inches)	Max. Height (Millimeters)
Glazed with FireLite Plus Hurricane or FireLite Plus Hurricane IGU					
Max Door Opening, active/active:	20 - 90	85-3/8	2,168	96	2,438

8107 Bracken Place SE • Snoqualmie, WA 98065
p 800.426.0279 e tgp.sales@allegion.com w fireglass.com

General Information

AMERICANS WITH DISABILITY ACT STANDARDS ON FIRE PROTECTION DOORS

If fire doors were required to meet A.D.A. (Americans with Disability Act) Standards, many would not open or close with adequate force to prevent passage of flames and smoke. Recognizing this special fire safety need, NFPA 101 (National Fire Protection Association) allows operational features for fire doors (opening forces, closing speeds, etc.) that are different than for non-fire-rated doors. These fire "protective" steel doors carry ratings from 20-90 minutes for fire protection. Heat transfer through the door is not an issue, so they are constructed without interior insulation.

CONVENTIONAL WOOD OR HOLLOW METAL DOORS IN FIREFRAMES HURRICANE DOOR SYSTEM FRAMES

Conventional fire-rated wood or hollow metal doors are not allowed to be installed into TGP's narrow profiled Fireframes Hurricane Door System frame.

FIRE-RATED GLAZING OPTIONS

Technical Glass Products provides a complete line of fire-rated glazing options to complement the Fireframes products. Refer to your Technical Glass Products SpeciFIRE® Selection Guide, available from your sales representative or online at **www.fireglass.com**.

Please consult your Technical Glass Products sales representative to determine the best option for your application.

Glazing Product	Available Fire Rating (minutes)	Offers High Impact Safety	Passes Hose Stream Test	Temperature Rise	Complies with Energy Codes	Compatible with TGP Framing	Provides Acoustic Barrier	Advantages / Disadvantages
FireLite Plus Hurricane IGU	20/45/60/90	●*	●		●	●	●	+ Durable laminated construction + High impact resistance + Energy efficient + Acoustic Barrier + Wide choice of appearances
FireLite Plus Hurricane	20/45/60/90	●*	●			●		+ Durable laminated construction + High impact resistance

Note: * Meets CPSC 16 CFR 1201: Category I and II

General Information

GLAZING SPECIFICATIONS

Only the glazing combinations below are allowed in the Fireframes Hurricane Door System. IGUs may be made of tempered glass, uncoated or with high performance low-emissivity coatings. Laminated outboard lites are not allowed.

DOWSIL 995 structural silicone sealant is used as the primary glazing compound on both the protected (interior/bead side) and unprotected (exterior/flange side) of the glazing. For 20-60 minute fire-rated installations, closed cell 1/2" wide single sided adhesive PVC glazing tape of any common brand (available from your local glazing supply house) is recommended for use as small shims to maintain the appropriate gap between frame and glass.

For 90-minute applications exceeding 1,393 sq. inches. Kerafix® 2000 glazing tape (white – calcium magnesium silicate) supplied by TGP must be used below the DOWSIL 995 sealant noted above. See "Glazing Tape" on the Material Key Chart. Refer to table below for glazing tape thickness required for specific glazing products.

Glazing Product	Weight (Approx.) Pounds per Sq. Ft.	Glazing Thickness		Glazing Tape Thickness Used		Glazing Tape Thickness Used (Wide Stile)	
FireLite Plus Standard	4.5	13/32"	10 mm	1/8"	3 mm	1/8"	3 mm
FireLite Plus Premium	4.5	13/32"	10 mm	1/8"	3 mm	1/8"	3 mm
FireLite Plus IGU Standard	7.6	1"	25 mm	3/16"	5 mm	3/16"	5 mm
FireLite Plus IGU Premium	7.6	1"	25 mm	3/16"	5 mm	3/16"	5 mm

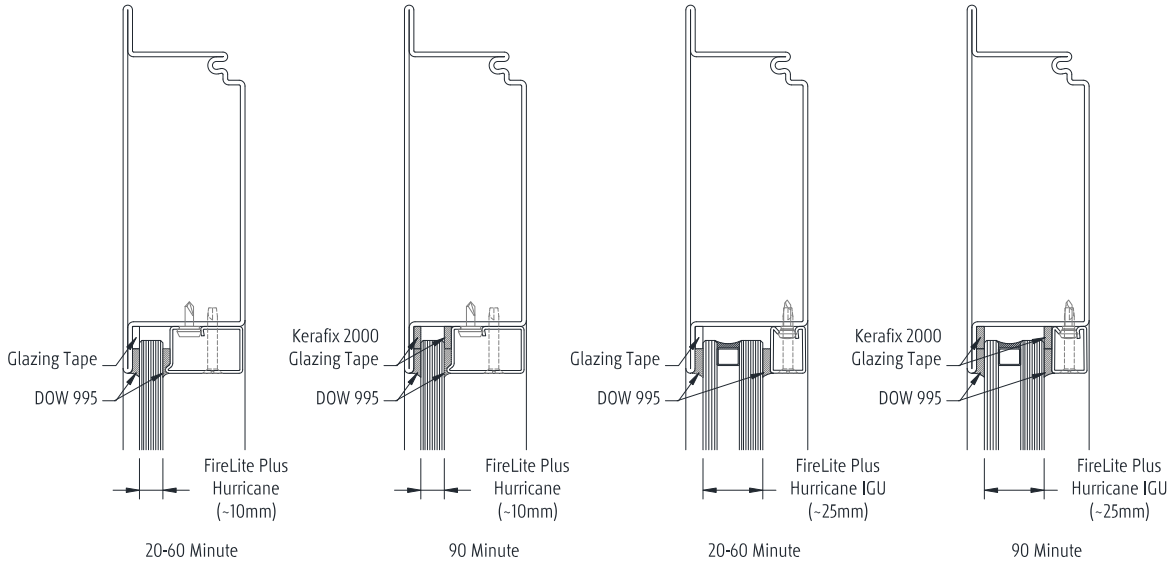

Figure 3 - Typical Glazing Options

General Information

HOW TO DETERMINE DOOR HANDING

Doors are always viewed and identified by the secure (lockable) side of the door. The non-lockable side is not secured and always available for emergency egress (panic exit).

NOTE: * Active/Active pairs of doors require exit devices be installed on both leafs.

LHRA/RHRA Pair (Active / Active)	Left Hand Reverse Active & Right Hand Reverse Pair of Doors **

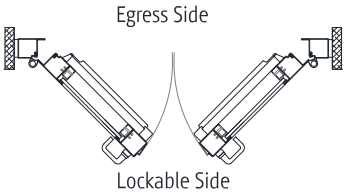

Figure 4 - Door Handing Chart

General Information

DOOR HARDWARE CONFIGURATIONS AND HARDWARE OPTIONS

The Fireframes Hurricane Door System has been developed with narrow steel profiles which exceed traditional fire-rated frame systems in aesthetics and performance. The additional windstorm rating further limits the use of hardware specifically to those listed herein and on TGP's Florida Building Code product approval listing. TGP offers a complete line of select hardware options which have been fit- and function-tested for use with these profiles.

Not all fire-rated hardware components available are compatible with TGP's narrow profile systems and not all hardware is windstorm appropriate. Should you request an item of hardware not standardly supplied by TGP, please forward all relevant information (manufacturer, model number, fabrication template and if required physical sample) to TGP for evaluation by our engineering staff, to determine if it can be supplied by TGP for use. Use of non-standard hardware will incur additional cost and lead time.

For detailed hardware information refer to individual cut sheets available from Technical Glass Products.

Required: ● Required Option: ⦿ Optional: ○ Not Available: Blank

Door Swing Type	LHRA/ RHRA (PAIR)	Manufacturer - Notes
Door Bottom Smoke Seal	●	Pemko – Automatically seals to floor when door is closed.
Perimeter Gaskets	●	TGP – Double overlapping seal system provides effective seal against weather and smoke.
Weld-On Pivot	●	TGP – Three pivots standard.
Closer	⦿	LCN – 4040XP Surface Mounted, Push Side standard.
Exit Device and Latching	●	Von Duprin – Surface Vertical Rod (Bottom Rod Required).
Cylinder	○	Schlage C Keyway (standard).
Concealed Power Transfer	○	EPT-10 – For use with electric options.
Power Supply	○	Von Duprin – Power for electric exit devices.

Figure 5 - Hardware Configuration Chart

Recommended Guidelines

1. REVIEW CONTRACT DOCUMENTS

Review architectural drawings, specifications, and approved TGP project drawings, installation instructions, and shipping lists to become thoroughly familiar with the project. The TGP project drawings take precedence and include specific details for your installation. These installation instructions are of a general nature and cover most conditions.

2. BUILDING CODES

Due to the diversity in local, state / provincial, or federal laws and the codes that govern design and application of architectural products, it is the responsibility of the individual architect / owner and installer to ensure that products selected for use on projects comply with all the applicable building codes and laws. Technical Glass Products exercises no control over the use or application of its products, glazing materials, and operating hardware and assumes no responsibility thereof. Compliance of TGP project drawings with applicable codes for a given project shall be the responsibility of the Buyer.

3. COORDINATION WITH OTHER TRADES

Coordinate with the general contractor any sequence with other trades which impact installation (i.e. fire proofing, back-up walls, partitions, ceilings, mechanical ducts, converters etc.) or in which installation may impact the work of adjacent trades.

4. INSTALLATION

All materials are to be installed plumb and level.

5. BENCHMARKS

All work should start from benchmarks and/or column lines as established by the architectural drawings and the general contractor with guaranteed accuracy. Using these datum points and lines, determine:

a. The plane of the wall in reference to offset lines provided on each floor;

b. The finish floor lines in reference to benchmarks on the outer building columns; and

c. Mullion spacing from both ends of openings to prevent dimensional build-up of daylight opening.

6. SURROUNDING CONDITIONS

a. Coordination of adjacent material and construction tolerances to TGP' s systems may be facilitated by TGP as part of preparing project drawings, and these drawings may indicate acceptable tolerances for critical dimensions. The installer should verify that surrounding construction is in accordance with the approved project drawings. Do not accept rough opening dimensions less than shown on project drawings. It is assumed that the minimal joint dimensions shown on the TGP project drawings match the field conditions. A frame may fit within a given opening, but sealants may not perform as detailed if a smaller sealant joint is installed. Expansion / contraction issues may also be compromised. IF THE JOINTS ARE SMALLER THAN THAT SHOWN ON THE TGP PROJECT DRAWINGS, DO NOT PROCEED. Notify the General Contractor that the conditions are not as detailed and wait for corrective work to be completed before starting this work.

b. The installer MUST notify and receive approval from TGP and the general contractor when conditions are not in accordance with approved project drawings and/or change any aspect of the structural performance of the Fireframes series before making any modifications to the TGP-furnished material or making changes which are different from those shown on the TGP project drawings. These conditions include, but are not limited to, anchor placement/location, changes in adjacent materials the anchor is being connected to or changes to dimensional relationships between framing, anchors and connection to adjacent materials.

c. TGP must review and approve any changes required prior to the subcontractor installing any "corrective" work. These reviews may incur additional charges, which must be approved by the TGP customer prior to TGP's review.

7. FRAME CONSTRUCTION VARIES

Door frames are shipped fully welded ready for installation.

8. FASTENING

Within the body of these instructions, "fastening" means any method of securing one part to another or to adjacent materials by means other than welding, adhering or using a mechanical fastener as shown on the approved details. Only those fasteners used within the system are specified in these instructions. **Due to the varying perimeter conditions and performance requirements, perimeter and anchor fasteners are not specified in these instructions and are the responsibility of the installer.**

9. SEALANTS

a. Sealants must be compatible with all materials they are in contact with, including other sealant surfaces. Consult with sealant manufacturer for recommendations relative to joint size, shelf life, compatibility, cleaning/priming, tooling, adhesion, etc.

b. The chemical compatibility and/or adhesion of all glazing materials and framing sealants with each other and with like materials used in glass and frame fabrication must be established by the installer. This is required on every project.

c. If required by the project specifications, it is the responsibility of the glazing contractor to submit any documentation or samples from the sealant manufacturer indicating that glass and glazing material has been tested for chemical compatibility and / or adhesion with glazing sealants. **This applies to all TGP materials in contact with any sealant.** TGP will furnish samples of these materials upon request.

d. The implementation of the test results is the responsibility of the installing contractor, and includes material performance and recommendations for primers and substrate preparation required to obtain adhesion.

10. PERIMETER JOINTS

Perimeter seals and/or expansion joints shown in these instructions and in the TGP project drawings are shown at nominal size. Actual dimensions may vary due to perimeter conditions and / or difference in metal temperature between the time of fabrication and the time of installation. Design and detailing have been based on a fabrication / installation temperature of 70° F (21° C). If extreme temperatures exist at time of installation, gaps between expansion members may require slight adjustment.

Sample Elevations – Door Pairs

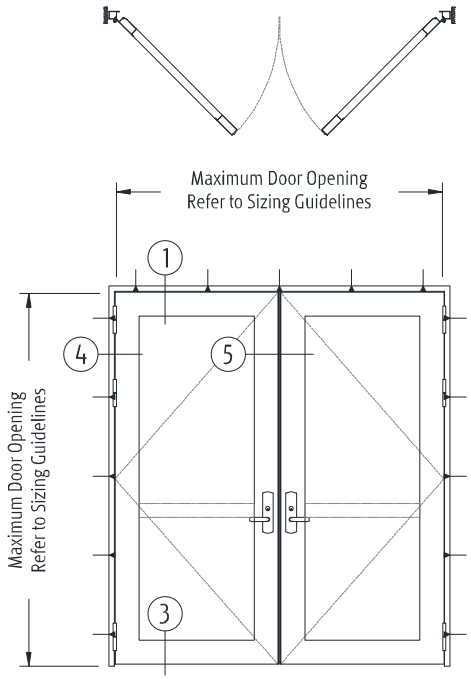

Figure 6 - Pair of Wide Stile Doors Active / Active

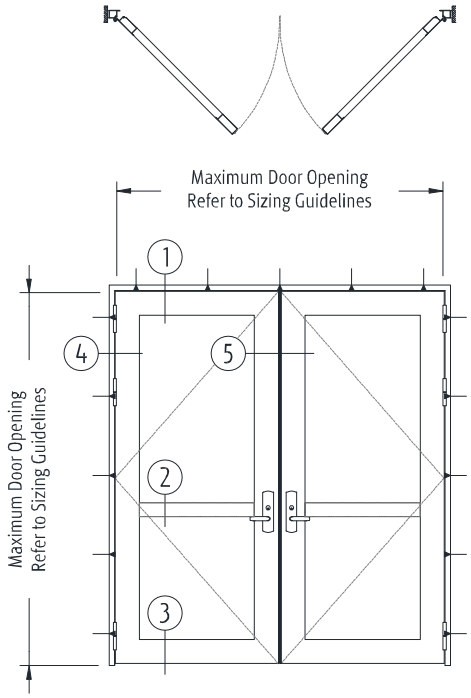

Figure 7 - Pair of Wide Stile Doors Active / Active with Midrail

Perimeter Anchors - ►—
Approximate anchor hole location

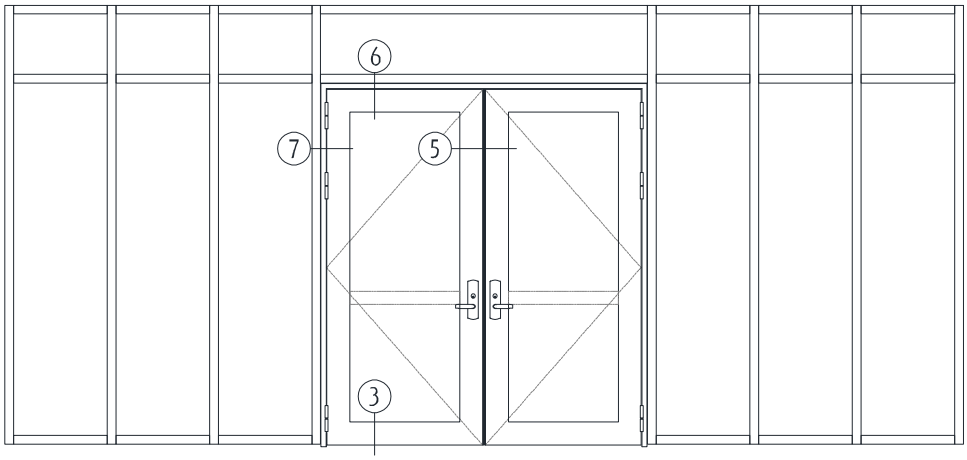

Figure 8 - Pair of Wide Stile Doors within Fireframes Hurricane Curtainwall System

Sample Section Details – Doors

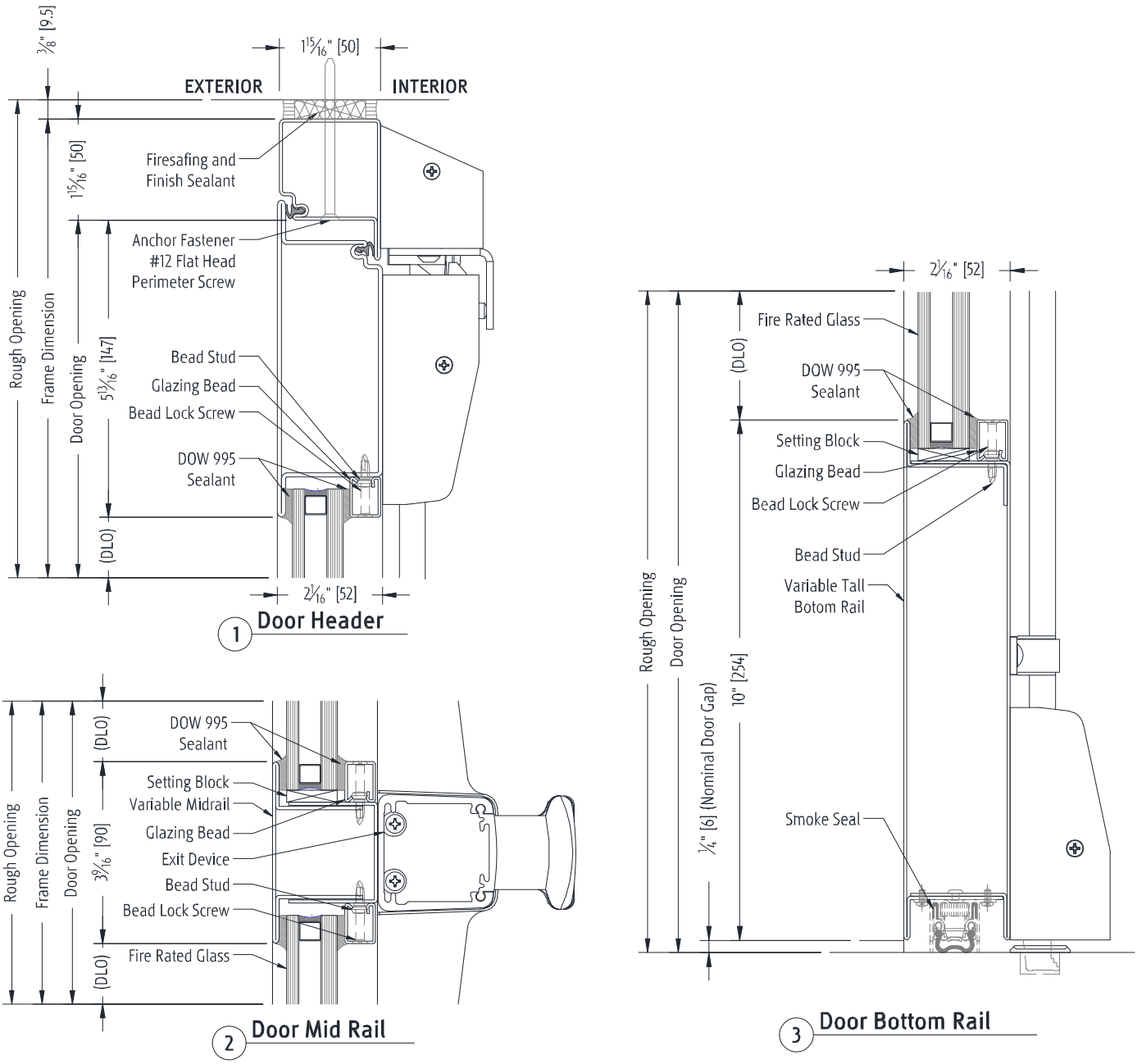

Figure 9 - Wide Stile Door Details

Sample Section Details – Doors

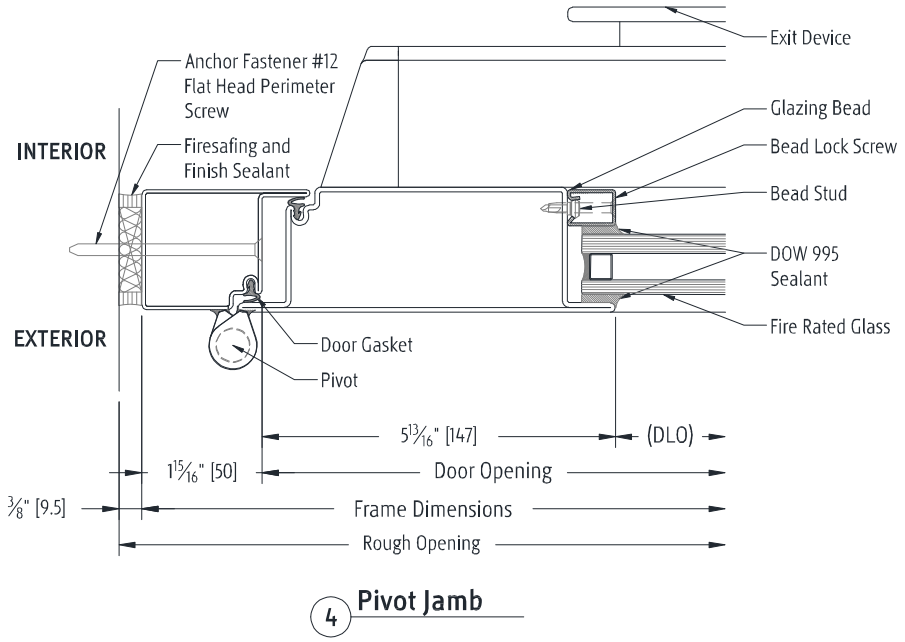

Figure 10 - Wide Stile Meeting Combinations (Pivot Jamb)

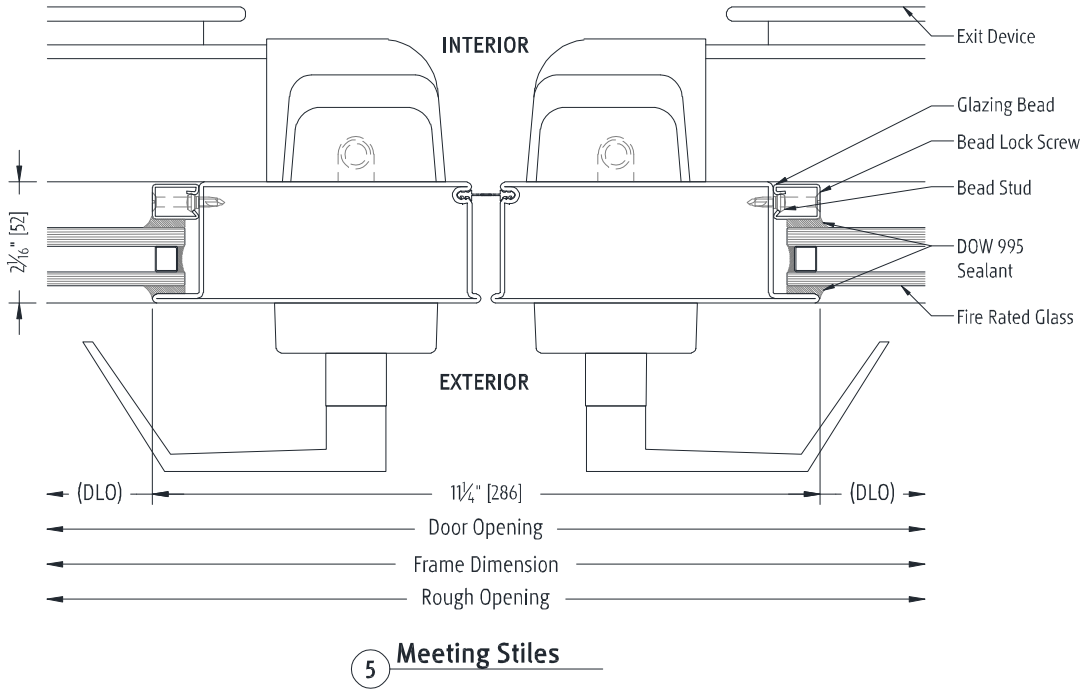

Figure 11 - Wide Stile Meeting Combinations (Meeting Stiles)

Sample Section Details – Doors

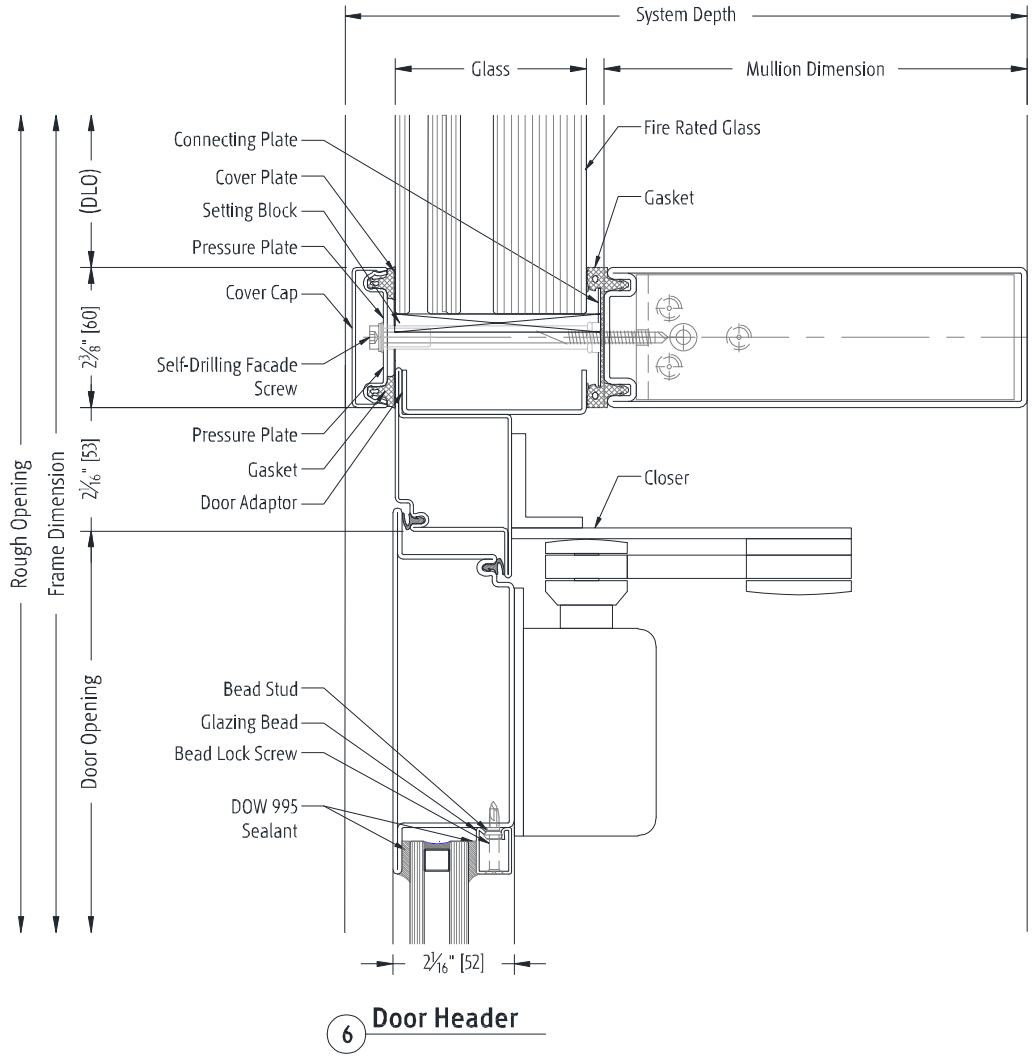

Figure 12 - Door Header Detail with Fireframes Hurricane Curtainwall System

Sample Section Details – Doors

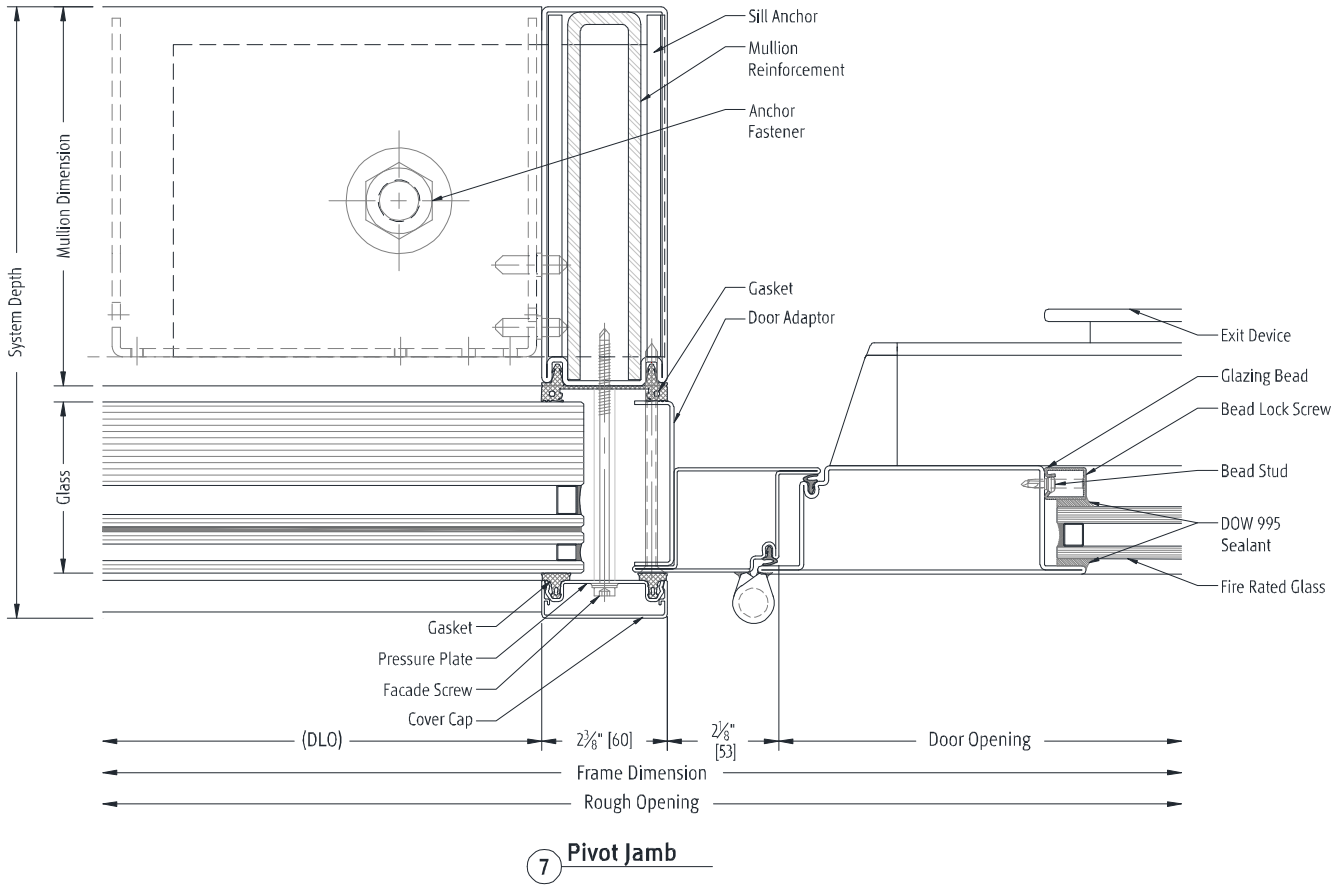

Figure 13 - Door Pivot Jamb Detail with Fireframes Hurricane Curtainwall System Surrounding

In accordance with California Prop 65, products received from TGP may contain the required warning label (below) indicating that they may contain door hardware or other components known to cause cancer and reproductive harm. For more information, go to www.P65Warnings.ca.gov.

In accordance with California PROP65 -
⚠**WARNING**: Cancer and Reproductive Harm-www.P65Warnings.ca.gov
⚠**ADVERTENCIA:** Cáncer y Daño Reproductivo-www.P65Warnings.ca.gov
⚠**AVERTISSEMENT:** Cancer et Troubles de l'appareil reproducteur-www.P65Warnings.ca.gov
P518-742